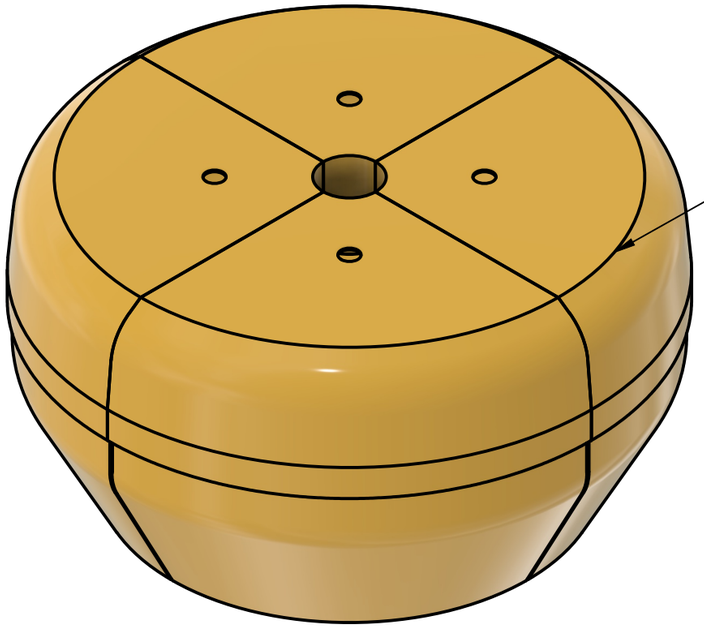


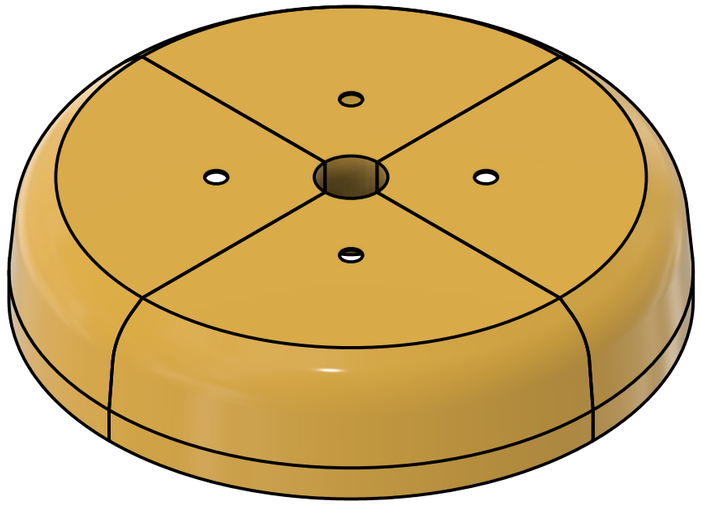

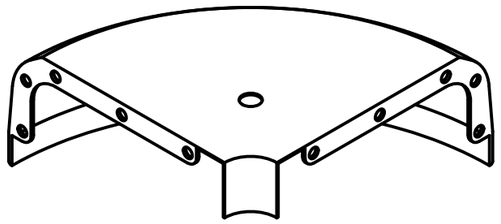

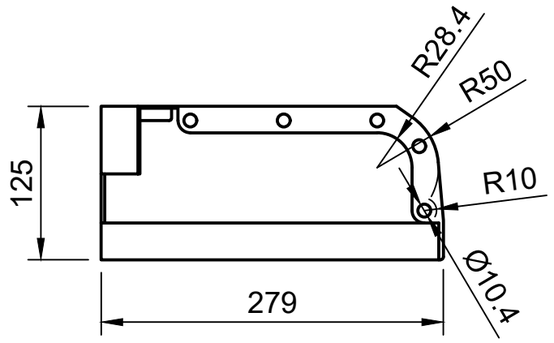


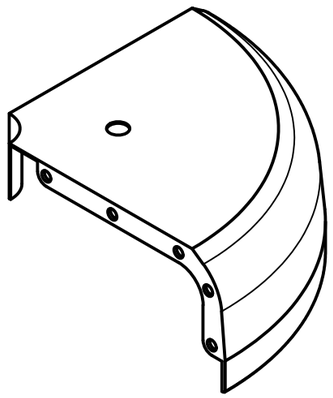

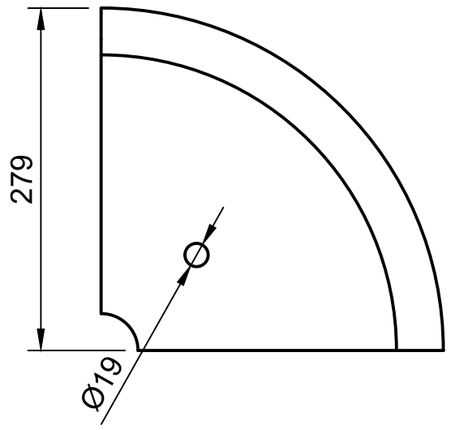


| Dept. | Technical reference | Created by<br>Sergio Marin 26/01/2026 | Approved by | |
|---|---|---|---|---|
| | | Document type | Document status | |
| | | Title<br>ECOBOYA_FLOTADOR | DWG No. | |
| | | | Rev. / Date of issue | Sheet<br>2/2 |